Littelfuse®
Expertise Applied | Answers Delivered

LGBC SERIES LIFTGATE BATTERY CHARGER

Integrated Liftgate Charging Solution

Description

The Liftgate Battery Charger (LGBC) series keeps liftgate batteries optimally charged in environments where liftgates are frequently used. Liftgate batteries with long cable runs from the tractor, are subject to significant voltage drop; also trailer plug connectors may contribute to additional electrical issues. These factors often result in an under charged or drained trailer battery, loss of function of the liftgate, as well as the liftgate motor operating at a lower voltage and higher current than rated, leading to a shorter life of the battery.

The LGBC ensures that trailer/liftgate batteries are charged in the fastest and most efficient way by boosting the charging voltage and monitoring liftgate battery status. The unit helps compensate for common issues such as liftgate batteries being drained too fast, and charging voltages too low to keep the batteries charged.

Features and Benefits

- Dynamically adjusts charging current according to resistance caused by the tractor-trailer connector (7-pin, 2-way or 1-way) and compensates for electrical loads (lights, brakes, etc.) to maximize battery charge.
- Selector switch on the unit ensures optimal charge profile for AGM or flooded lead acid batteries.
- Three stage battery charging (Bulk, Absorption and Float) maximizes battery life which allows for a reduction in long-term maintenance costs.
- Temperature sensor (included) is mounted directly on the battery post, enabling the unit to compensate the charge voltage to optimize battery recharge levels and life of the battery.
- Selector switch on the unit enables battery charging after the engine is off, while maintaining starting capability
- Fully sealed unit is IP67 and IP69K rated so it can be mounted in locations subject to roadsplash.
- Does not interfere with trailer ABS systems and prevents the supply voltage from dropping below the minimum input voltage of 9.5 Vdc, complying with FMVSS 121, SAE J2247, and TMC RP141 (for air brake systems).
- LGBC kits are available to help minimize installation time and costs by including required fuses and wiring harness.

Specifications Overview

Input Voltage Range	+9.5 to +16 Vdc
Max Output Current	20 A & 35 A
Storage Temperature Range	-55° C to +125° C
Ambient Air Operating Temperature	-40° C to +85° C
Dimensions	143 x 192 x 60 mm
Weight	8.8 lb (4 kg)
Compliance	FMVSS 121 SAE J227 TMC RP141
Ingress (IP) Rating:	IP67 and IP69K

Web Resources

Download 2D print and technical resources at:
littelfuse.com/LGBC

Ordering Information

PART NUMBER	MAXIMUM OUTPUT (Amp)	DESCRIPTION
880209	20	Unit Only
880210	35	Unit Only
880211	35	Kit with Unit, Harness & Fuses

Control Switch Detail

Premium SUPPLY
(866) 934-0777 • (903) 455-7777
www.premium-supply.com

© 2015 Littelfuse Commercial Vehicle Products
Rev: 100515

LIFTGATE BATTERY CHARGER

Dimensions millimeters

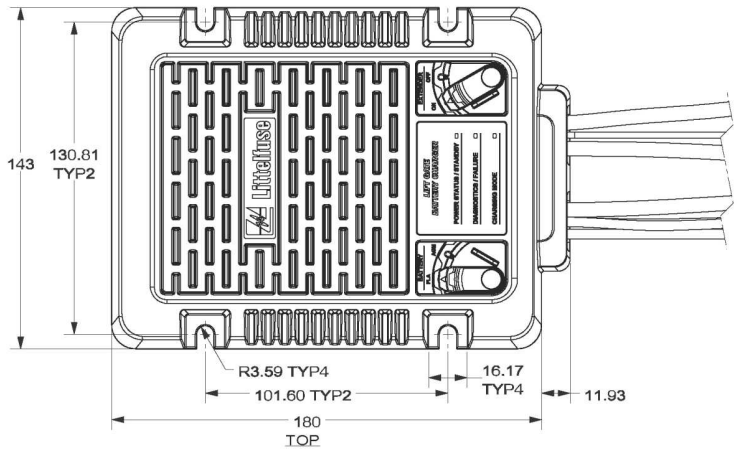

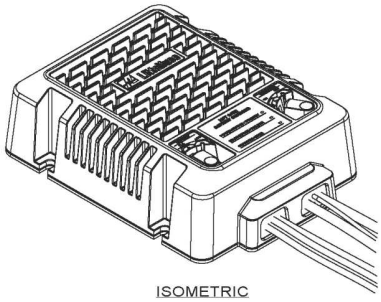

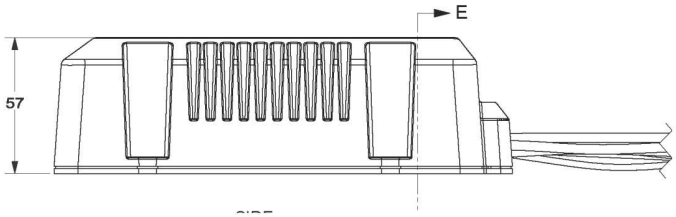

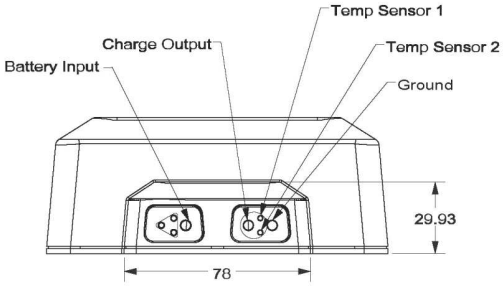

Configurations

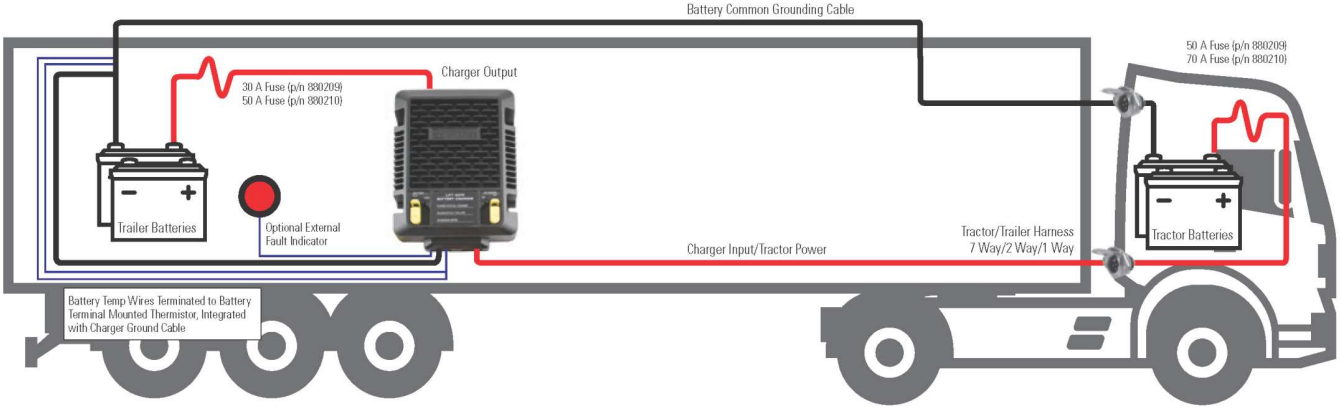

Visit **Littelfuse.com** for the most up-to-date product information. Littelfuse reserves the right to make product changes, without notice. Material in this document is as accurate as known at the time of publication.

© 2015 Littelfuse Commercial Vehicle Products
Rev: 100515